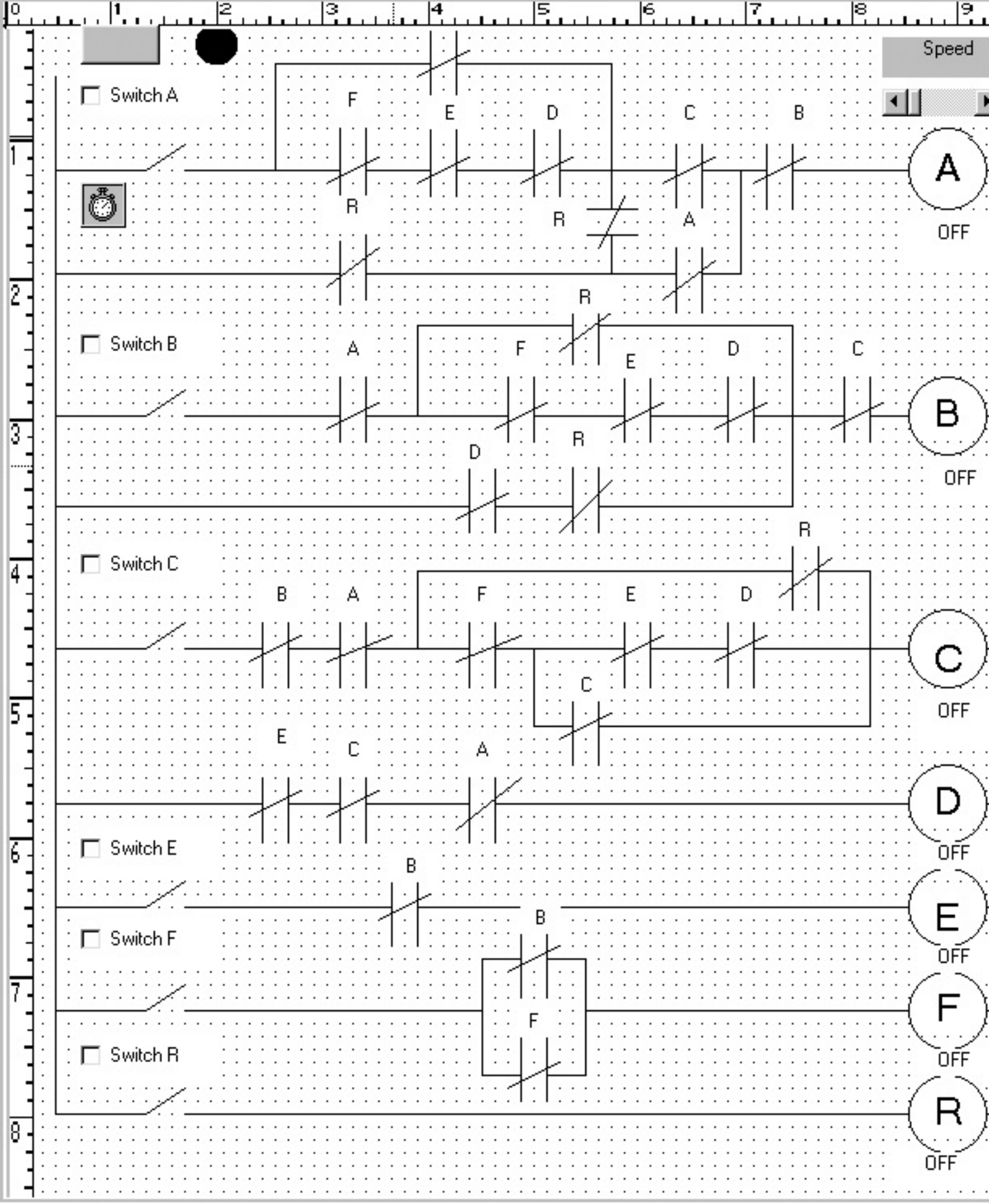
Speed
Switch A
F
E
D
C
B
R
R
A
A
OFF
Switch B
A
F
R
E
D
C
D
R
B
OFF
Switch C
B
A
F
E
D
R
C
C
OFF
E
C
A
D
OFF
Switch E
B
E
OFF
Switch F
B
F
F
OFF
Switch R
R
OFF